DIGITAL ELECTRONICS

Digital Queue Number System

Abdelrahman
Mohamed
El-said
921230062

Abdelrahman
Mohamed
Hesuian Hemeda
921230072

Ziad
Mohamed
Throut Mohamed
921220053

Seif
El-DEN
Ahmed Hesuian
921230055

Abdelrahman
Mohamed
Nagah Ibrahem
921230076

INTRODUCTION

Digital electronics plays an important role in modern electronic systems because it is widely used in counting, timing, monitoring, and control applications. Digital counters are commonly used in traffic systems, digital clocks, production lines, elevators, and queue management systems.

The main goal of this project is to design and implement a two-digit digital queue number system capable of counting from 00 to 99 using seven-segment displays. The circuit was designed using 74192 BCD counters, 7447 decoder ICs, logic gates, and a buzzer for indication.

The project was simulated using Proteus software and then implemented practically to understand the behavior of digital circuits in both simulation and real hardware environments.

Experiment Design and Simulation

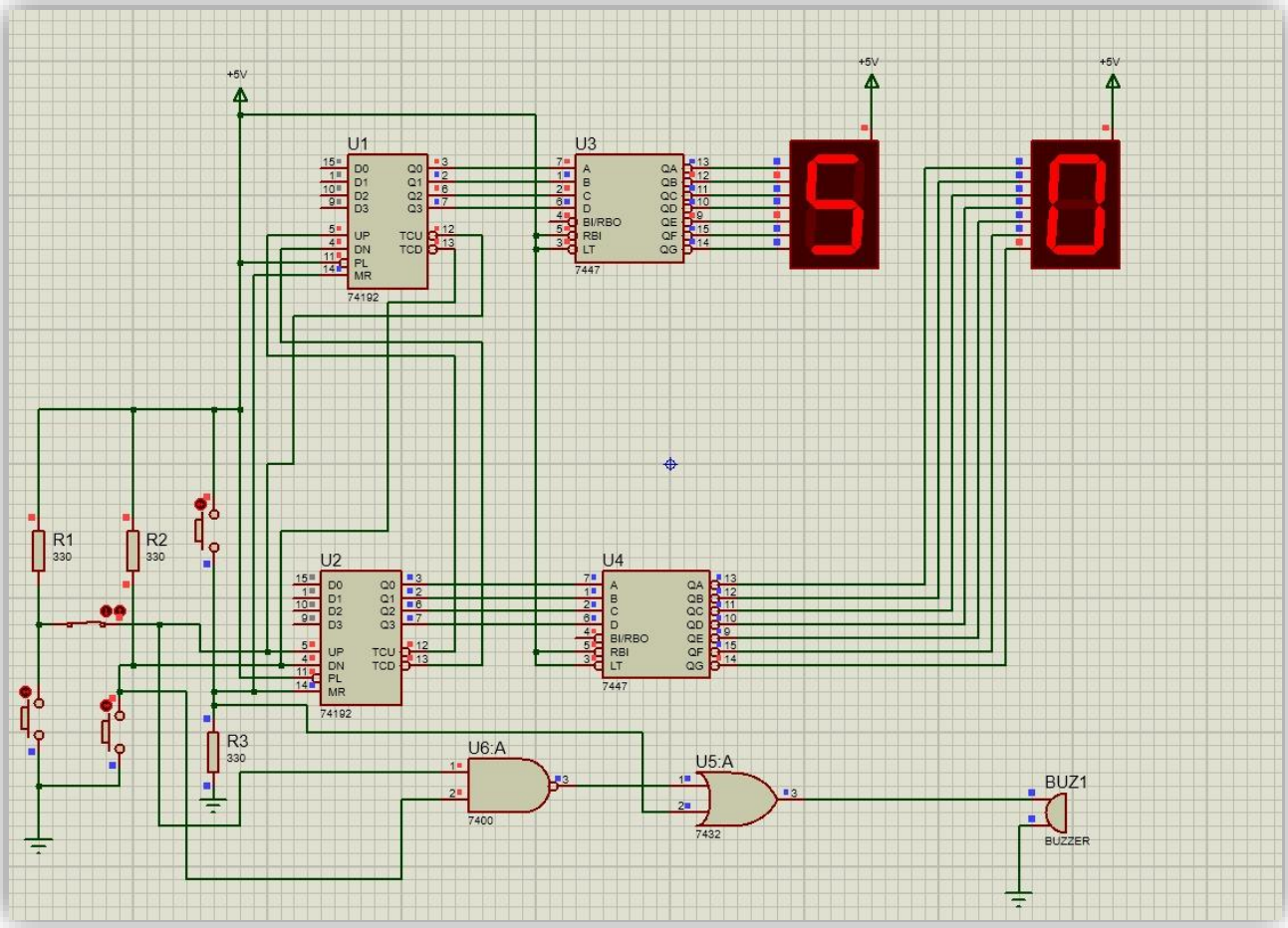

Circuit Operation

When the push button is pressed, a clock pulse is generated.

The pulse enters the first 74192 counter and increases the count value.

The counter produces a 4-bit BCD output which represents the current decimal digit.

This BCD data is sent to the 7447 decoder IC.

The decoder converts the binary input into signals suitable for the seven-segment display.

The display then shows the decimal number visually.

When the units counter changes from 9 to 0:
- A carry pulse is generated
- The second counter increases by one

The counting process continues sequentially until reaching 99.

The logic gates monitor selected outputs from the counters. When the required condition becomes true, the buzzer is activated to indicate the event.

74192 Counter IC

Function:
The 74192 is a synchronous BCD up/down counter.

Role in the Circuit:
- Counts decimal values
- Generates BCD outputs
- Produces carry and borrow signals
- Controls counting sequence

Usage:
- U1 controls the first digit
- U2 controls the second digit

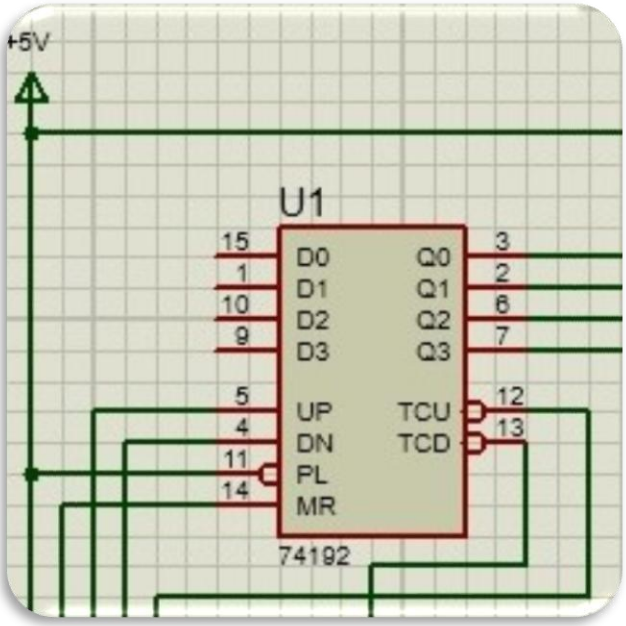

Important Pins:
- UP → Count up input
- DN → Count down input
- Q0-Q3 → BCD outputs
- TCU → Carry output
- TCD → Borrow output
- MR → Reset input
- PL → Parallel load input

7447 Decoder IC

Function:
Converts BCD data into seven-segment display signals.

Role in the Circuit:
- Receives binary data from counters
- Activates the correct display segments
- Makes the output readable as decimal numbers

Inputs:
A, B, C, D

Outputs:
QA to QG

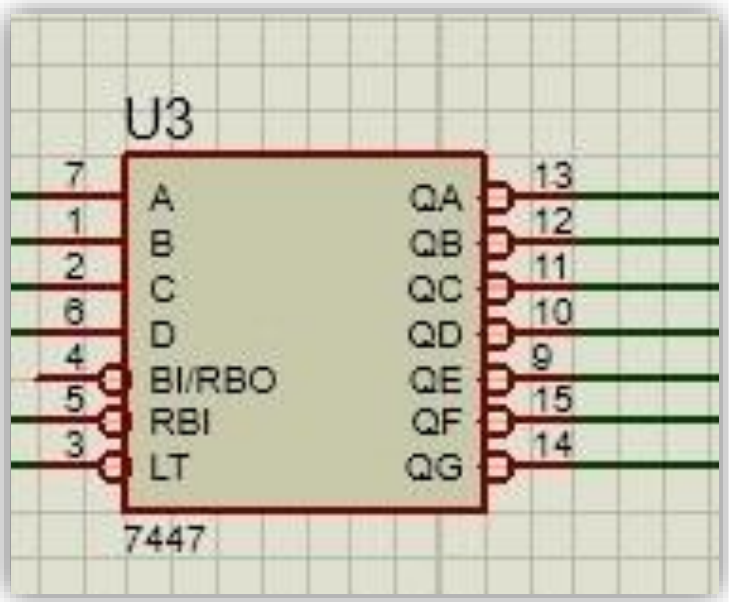

Seven-Segment Displays

Function:
Display decimal numbers visually.

Role in the Circuit:
- Show the units digit
- Show the tens digit

The displays receive control signals from the 7447 decoders

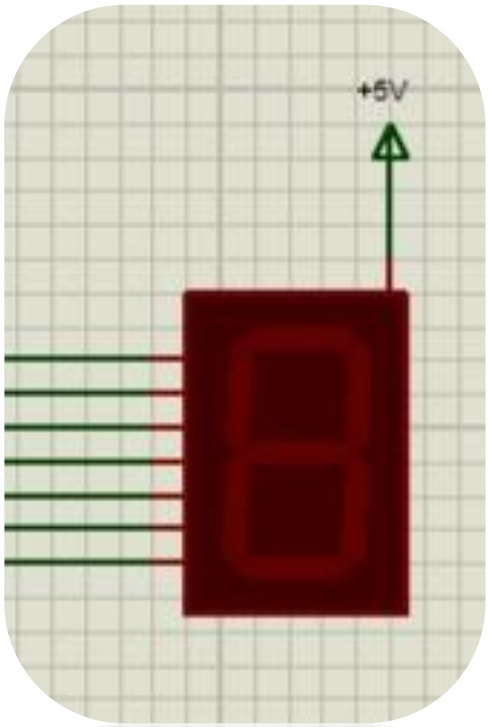

Push Buttons

Function:
Generate manual clock pulses.

Purpose:
Control counter operation manually
Increase count step by step

Resistors

Function:
Limit current flow.

Purpose:
Protect LEDs inside displays
Maintain safe operating current

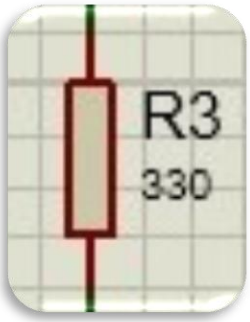

Dip Switch

Increment the queue number only when the Next button is pressed and the system is enabled.

BUZZER AND LOGIC GATES

Buzzer
Produces an audible sound signal.

Role in the Circuit:
Indicates a specific counting condition
Acts as an alarm or notification output

NAND Gate (7400)
Produces LOW output only when all inputs are HIGH.
Used in alarm activation logic.

OR Gate (7432)
Combines multiple logic signals into one output.
Used for signal selection and control operations.

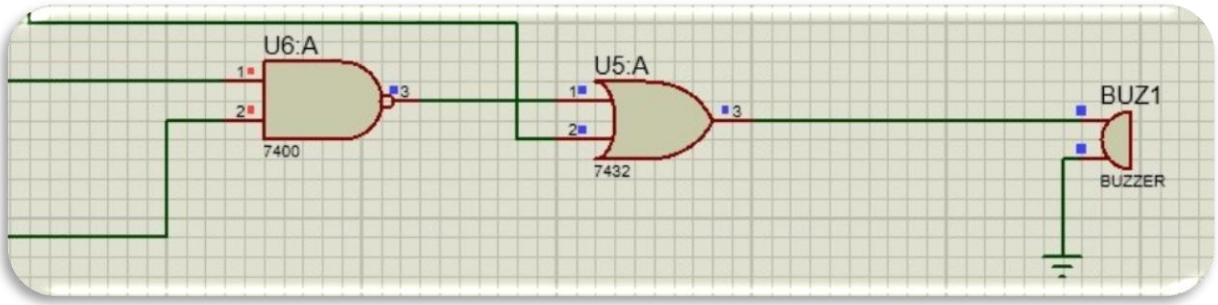

Circuit

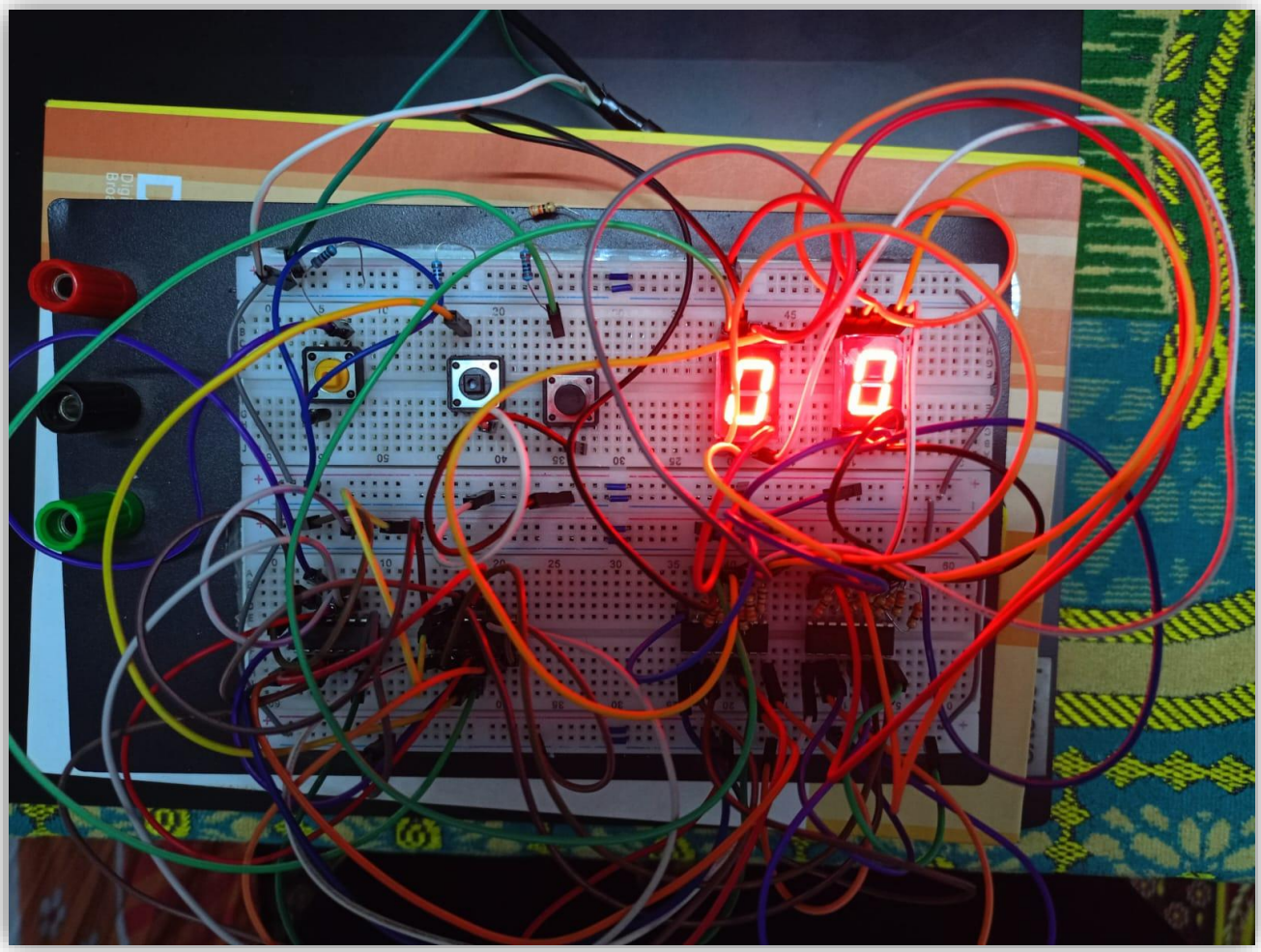

Problems Faced

1- Sometimes one segment of the 7-segment display stopped working correctly because of bad contact between the resistors and the display connections.

2- Proteus simulation did not always represent the real hardware accurately. Some components worked in simulation without essential elements such as resistors, while in real circuits the 7-segment display could be damaged over time without current-limiting resistors.

3- There was difficulty understanding how to correctly connect and use the Enable pin in the circuit.

Solutions

1- The wiring and resistor connections were checked and reorganized carefully to ensure stable operation of the seven-segment displays.

2- Proper current-limiting resistors were added to the real circuit to protect the displays and improve circuit reliability.

3- The IC datasheets were reviewed and several tests were performed until the correct Enable pin configuration was achieved.

Conclusion

This project successfully demonstrates the implementation of a two-digit decimal counter with an alarm indication system using digital integrated circuits.

The design combines counters, decoders, displays, logic gates, and a buzzer to create a complete digital counting system capable of displaying numbers from 00 to 99 accurately.

The project helped in understanding the practical use of synchronous counters, BCD systems, seven-segment displays, and logic gate operations.

It also improved circuit design and simulation skills using Proteus software.

THANK YOU